ACER_BAP41/BXP41

CARD READER BOARD

2009.06.30

	EE	DATE	POWER	DATE
DRAWER				
DESIGN			D-CS-1316A2271201-ALG	
CHECK				
RESPONSIBLE				

SIZE= VER:

FILE NAME: XXXX-XXXXXX-XX

P/N XXXXXXXXXXX

INVENTEC

TITLE BAP41/BXP41 Card Reader/B

SIZE	CODE	DOC.NUMBER	REV
Custom	A01		A01

SHEET 1 of 19

TO USIM Board

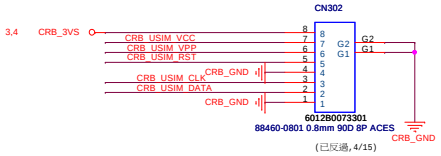

PCIE Mini Card(WLAN)

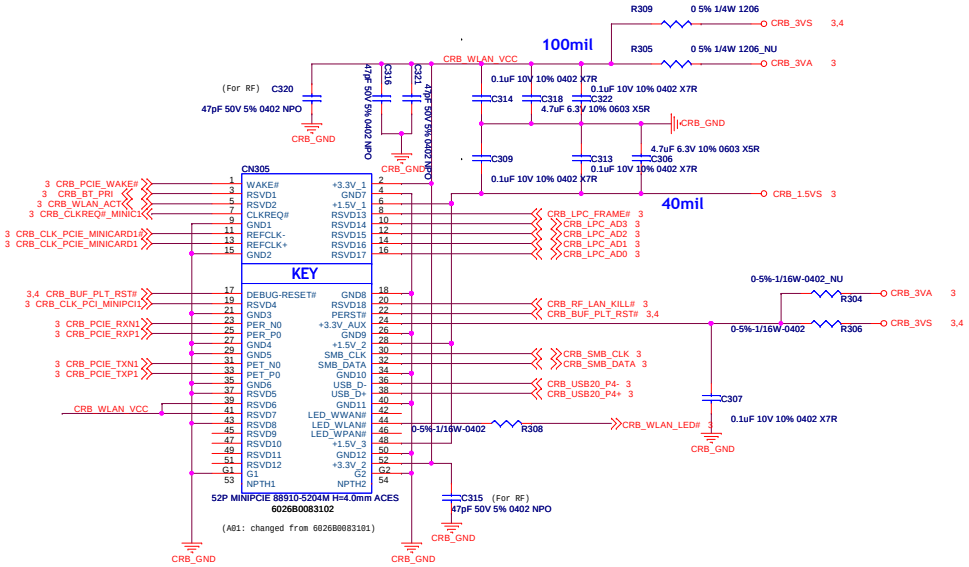

PCIE Mini Card for 3G

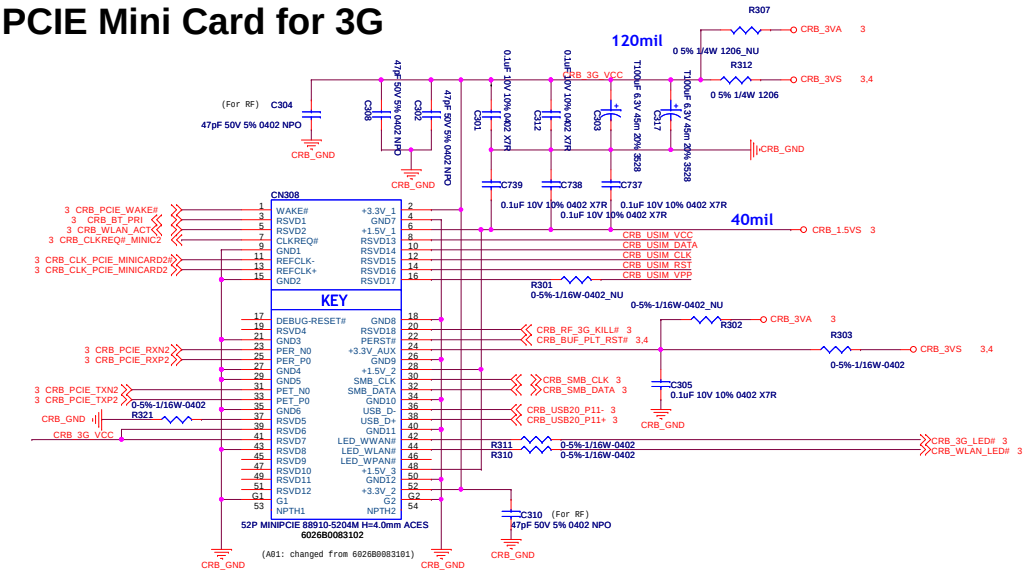

INVENTEC			
TITLE BAP41 Card Reader Board			
SIZE Custom	CODE A01	DOC.NUMBER	REV A01
		SHEET 2 of 19	

CHANGE by <CHANGE by> DATE Thursday, July 02, 2009

TO Transfer/B

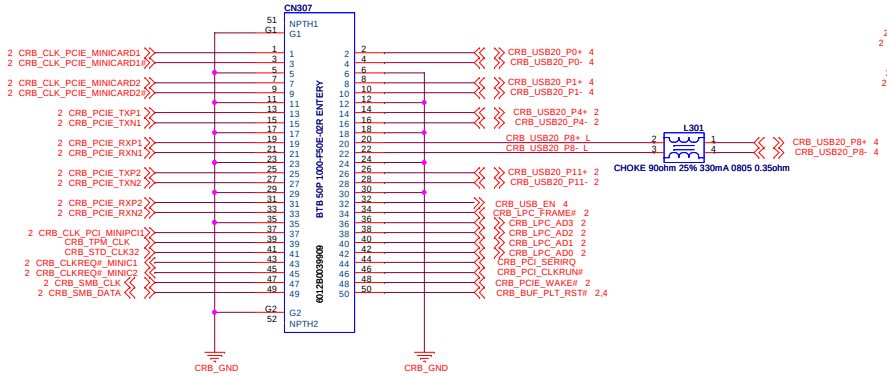

TO Transfer/B

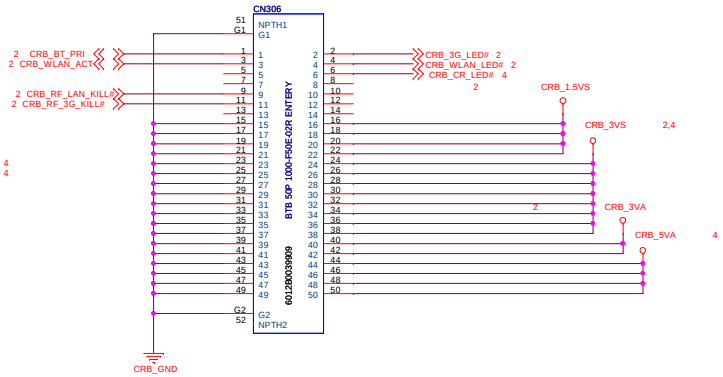

	EE	DATE	POWER	DATE
DRAWER				
DESIGN				
CHECK				
RESPONSIBLE				

SIZE= VER:

FILE NAME: XXXX-XXXXXX-XX

P/N XXXXXXXXXXXX

INVENTEC

TITLE: BAP41 CARD READER BOARD

SIZE	CODE	DOC.NUMBER	REV
Custom	A01	D-CS-1310A2291701-ALG	A01

SHEET 3 of 19

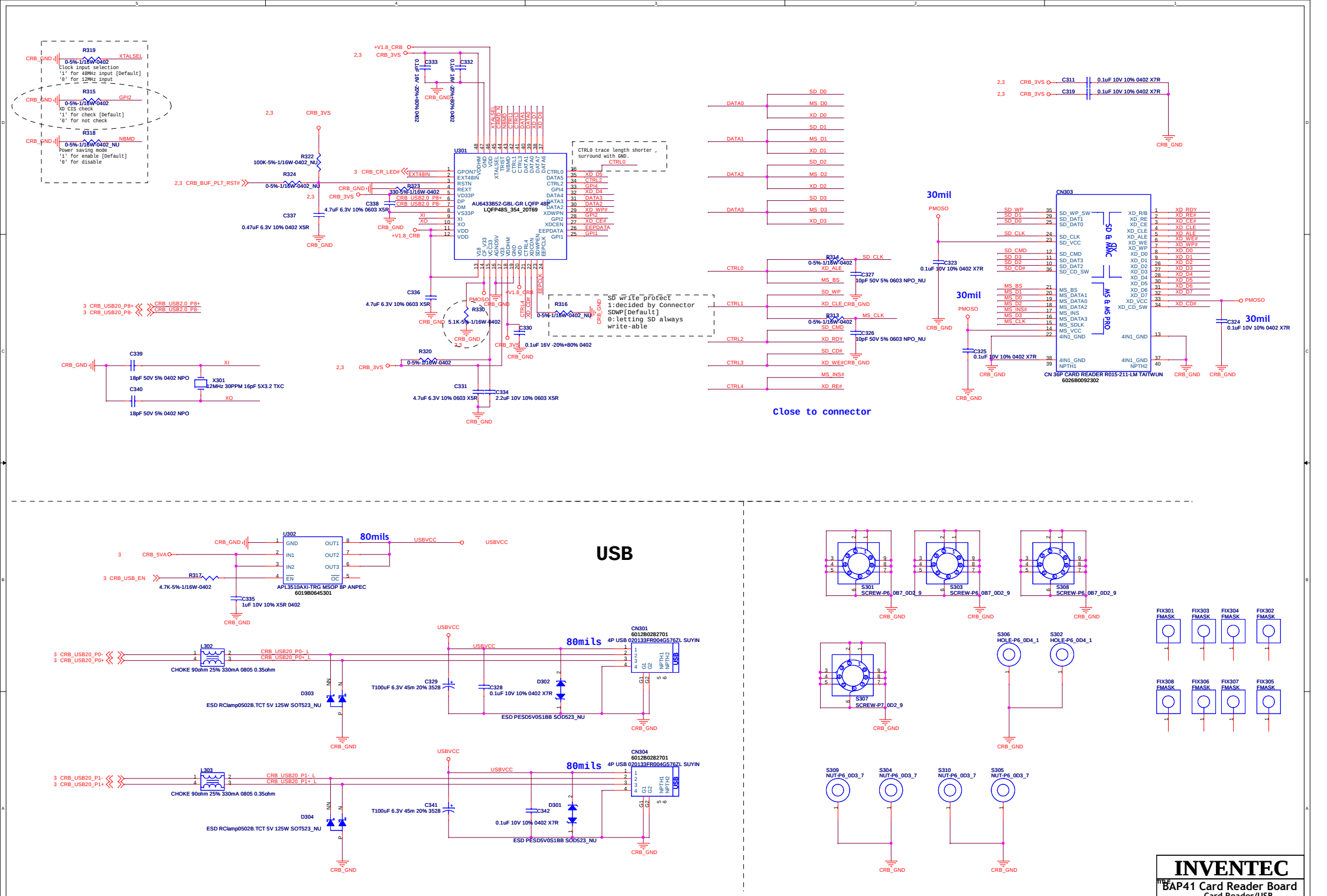
R319
0-5%-1/16W-0402
XTALSEL
Clock input selection
'1' for 48MHz input [Default]
'0' for 12MHz input
R315
0-5%-1/16W-0402
GPI2
XD CIS check
'1' for check [Default]
'0' for not check
R318
0-5%-1/16W-0402_NU
NBMD
Power saving mode
'1' for enable [Default]
'0' for disable
U301
AU6433B52-GBL-GR LQFP 48P
LQFP48S_354_20T69
CTRL0 trace length shorter , surround with GND.
SD write protect
1:decided by Connector
SDWP[Default]
0:letting SD always write-able
Close to connector
CN303
CN 36P CARD READER R015-211-LM TAITWUN
6026B0092302
30mil
X301
12MHz 30PPM 16pF 5X3.2 TXC
18pF 50V 5% 0402 NPO
0.47uF 6.3V 10% 0402 X5R
4.7uF 6.3V 10% 0603 X5R
0.1uF 16V -20%+80% 0402
2.2uF 10V 10% 0603 X5R
0.1uF 10V 10% 0402 X7R
10pF 50V 5% 0603 NPO_NU
CRB_GND
USB
U302
APL3510AXI-TRG MSOP 8P ANPEC
6019B0645301
80mils
USBVCC
CRB_5VA
CRB_USB_EN
4.7K-5%-1/16W-0402
1uF 10V 10% X5R 0402
L302
L303
CHOKE 90ohm 25% 330mA 0805 0.35ohm
ESD RClamp0502B.TCT 5V 125W SOT523_NU
ESD PESD5V0S1BB SOD523_NU
T100uF 6.3V 45m 20% 3528
CN301
CN304
6012B0282701
4P USB 020133FR004G576ZL SUYIN
S301
S303
S308
S307
S306
S302
S309
S304
S310
S305
SCREW-P6_0B7_0D2_9
HOLE-P6_0D4_1
NUT-P6_0D3_7
FIX301 FMASK
FIX303 FMASK
FIX304 FMASK
FIX302 FMASK
FIX308 FMASK
FIX306 FMASK
FIX307 FMASK
FIX305 FMASK
INVENTEC
BAP41 Card Reader Board
Card Reader/USB
SIZE Custom
CODE A01
DOC.NUMBER D-CS-1310A2291701-ALG
REV A01
CHANGE by <CHANGE by>
DATE Thursday, July 02, 2009
SHEET 4 of 19

ACER_BAP41

DC-JACK BOARD

2009.06.30

	EE	DATE	POWER	DATE
DRAWER				
DESIGN				
CHECK				
RESPONSIBLE				

SIZE= VER:

FILE NAME: XXXX-XXXXXX-XX

P/N XXXXXXXXXXX

INVENTEC

TITLE BAP41 DC-JACK BOARD

SIZE	CODE	DOC.NUMBER	REV
Custom	A01		A01

SHEET 5 of 19

TO USIM/B

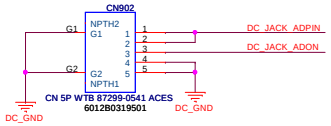

TO MB

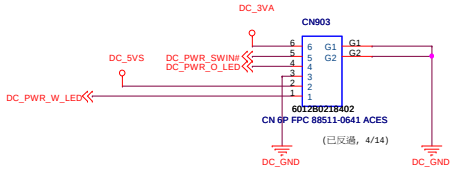

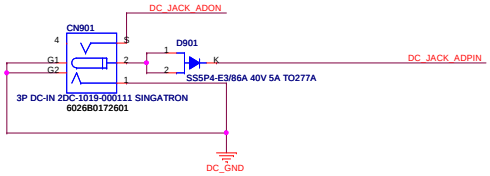

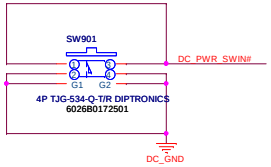

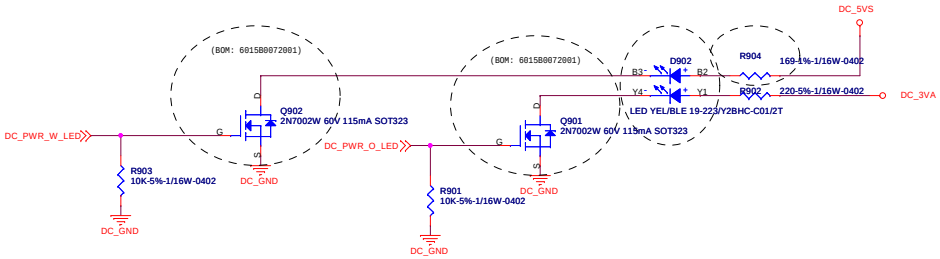

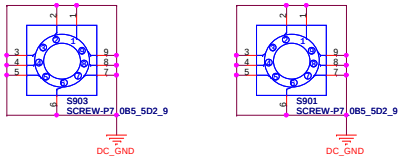

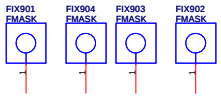

CHANGE by	<CHANGE by>	DATE	Wednesday, July 01, 2009		

INVENTEC

TITLE: BAP41 DC-JACK Board
DC JACK

SIZE	CODE	DOC.NUMBER	REV
Custom	A01		A01

SHEET 6 of 19

ACER_BAP41/BXP41

Audio BOARD

2009.06.30

	EE	DATE	POWER	DATE
DRAWER				
DESIGN				
CHECK				
RESPONSIBLE				

SIZE= VER:

FILE NAME: XXXX-XXXXXX-XX

P/N XXXXXXXXXXX

INVENTEC

TITLE

BAP41/BXP41 AUDIO BOARD

SIZE	CODE	DOC.NUMBER	REV
Custom	A02	D-CS-1310A2271201-ALG	A02

SHEET 7 of 19

EXT MIC

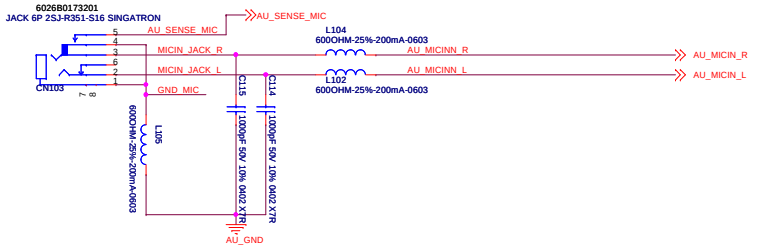

Headphone

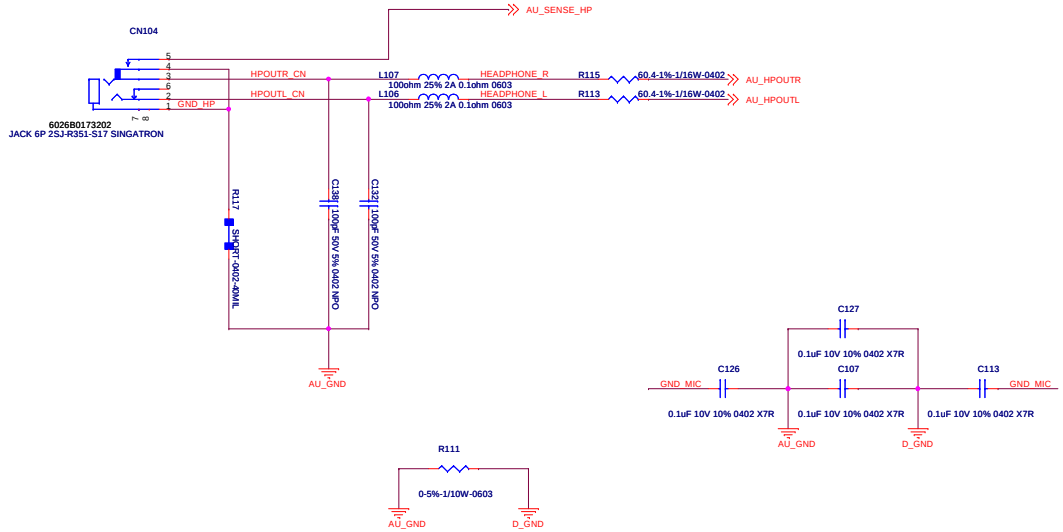

USB CN

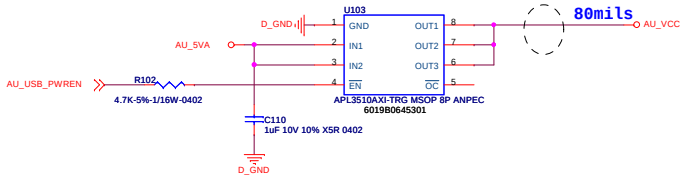

Resistor,Please close to USB connector

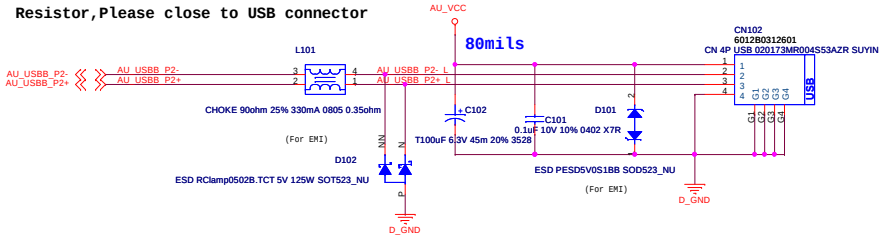

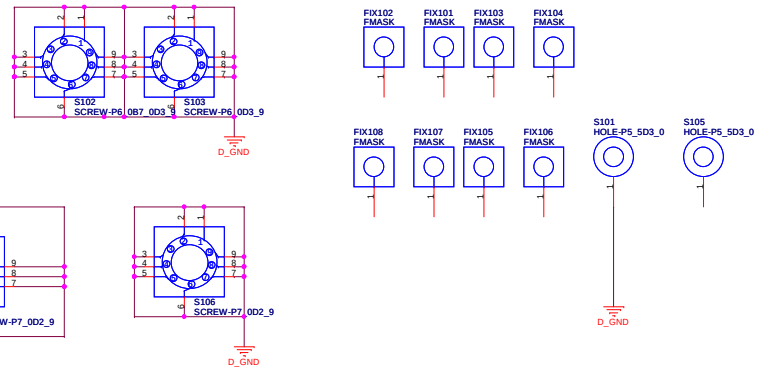

AUDIO/B TO MB

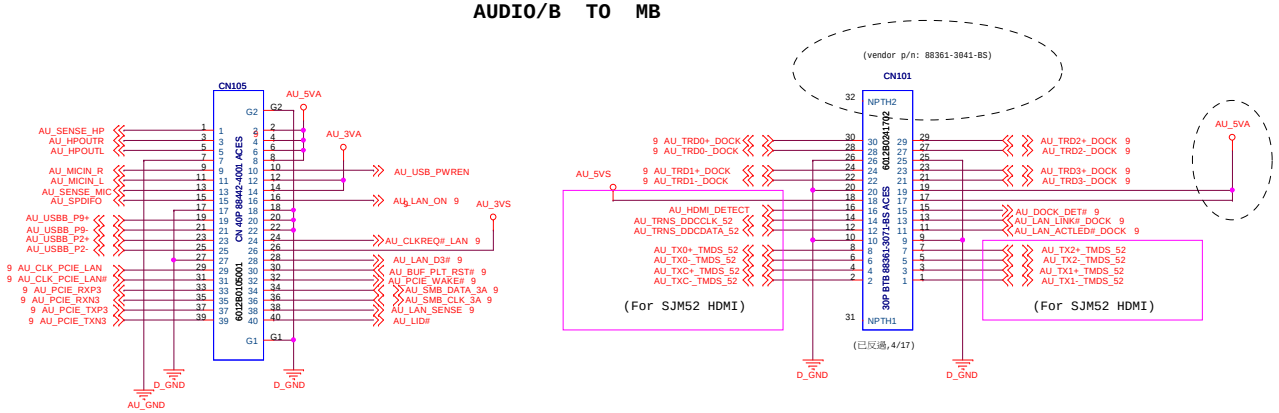

LID Switch

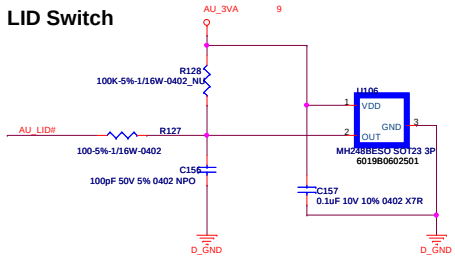

CHANGE by	<CHANGE by>	DATE	Thursday, July 02, 2009		

INVENTEC

TITLE BAP41 AUDIO Board JACK/USB

SIZE	CODE	DOC.NUMBER	REV
Custom	A02		A02

SHEET 8 of 19

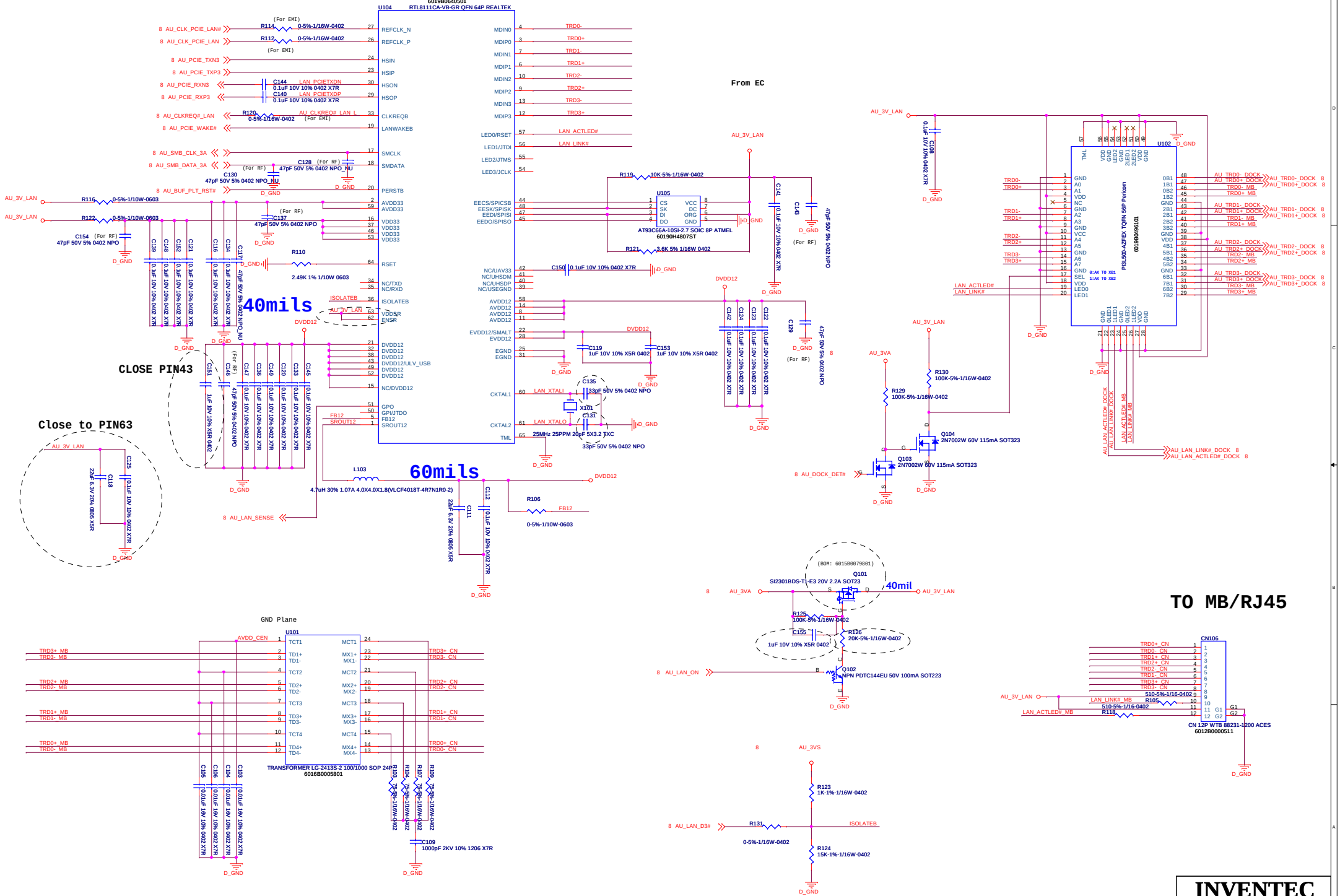

CHANGE by	<CHANGE by>	DATE	Thursday, July 02, 2009

INVENTEC

TITLE: BAP41 AUDIO Board
LAN (AR8131)

SIZE	CODE	DOC.NUMBER	REV
Custom	A02	D-CS-1310A2292301-ALG	A02

SHEET 9 of 19

ACER_BAP41

GP/FP BOARD

2009.06.30

	EE	DATE	POWER	DATE
DRAWER				
DESIGN			D-CS-1310A2271201-ALG	
CHECK				
RESPONSIBLE				

SIZE= VER:

FILE NAME: XXXX-XXXXXX-XX

P/N XXXXXXXXXXX

INVENTEC

TITLE BAP41 GP/FP Board

SIZE	CODE	DOC.NUMBER	REV
Custom	A01		A01

SHEET 10 of 19

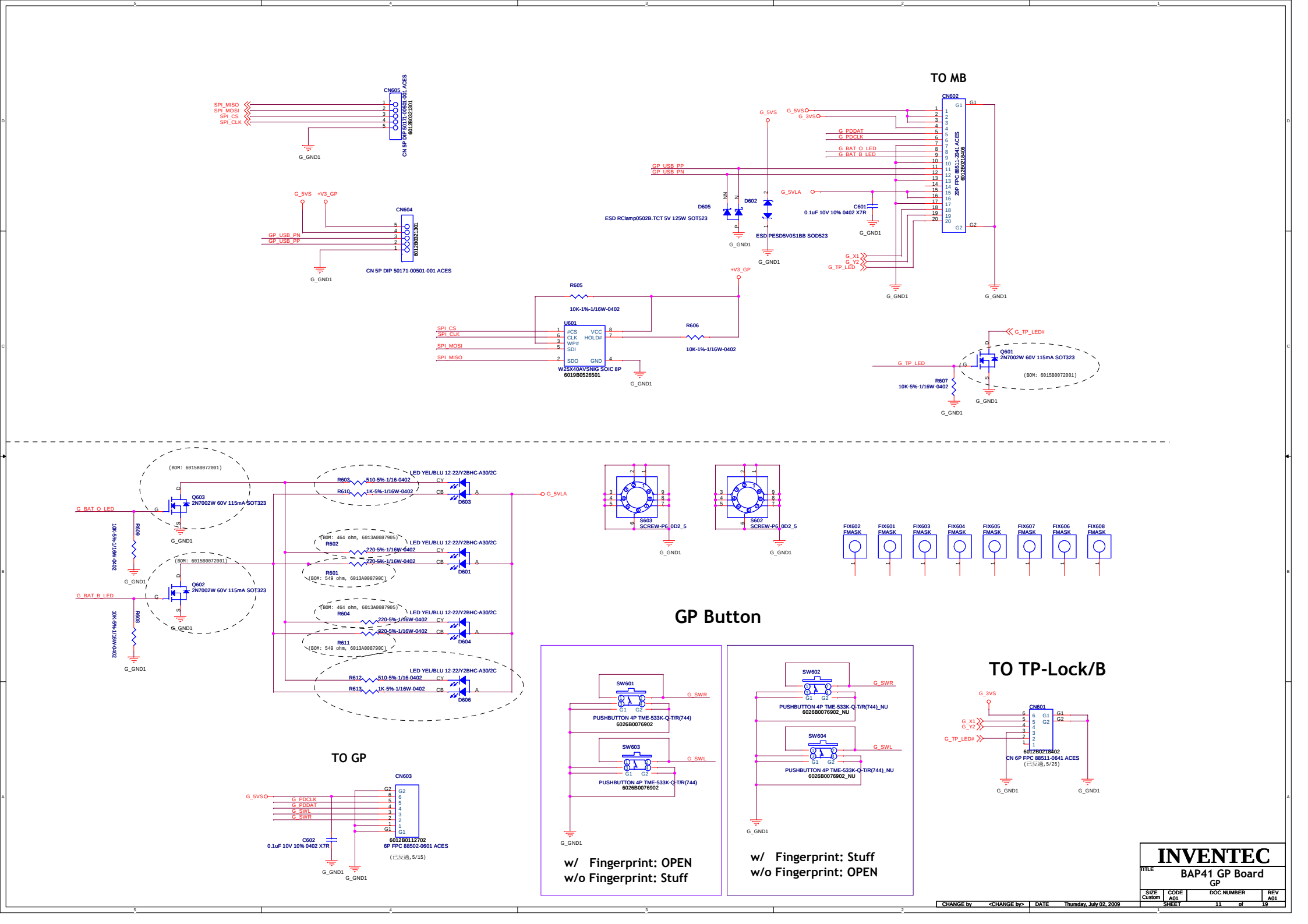
TO MB
CN605
CN 5P DIP 50171-00501-001 ACES
6012B0321301
SPI_MISO
SPI_MOSI
SPI_CS
SPI_CLK
G_GND1
CN604
CN 5P DIP 50171-00501-001 ACES
G_5VS
+V3_GP
GP_USB_PN
GP_USB_PP
CN602
20P FPC 88511-0641 ACES
6012B0218406
G_5VS
G_3VS
G_PDDAT
G_PDCLK
G_BAT_O_LED
G_BAT_B_LED
G_5VLA
G_X1
G_Y2
G_TP_LED
D605
ESD RClamp0502B.TCT 5V 125W SOT523
D602
ESD PESD5V0S1BB SOD523
C601
0.1uF 10V 10% 0402 X7R
R605
10K-1%-1/16W-0402
R606
10K-1%-1/16W-0402
U601
W25X40AVSNIG SOIC 8P
6019B0526501
SPI_CS
SPI_CLK
SPI_MOSI
SPI_MISO
Q601
2N7002W 60V 115mA SOT323
(BOM: 6015B0072001)
G_TP_LED#
R607
10K-5%-1/16W-0402
Q603
2N7002W 60V 115mA SOT323
Q602
2N7002W 60V 115mA SOT323
R609
R608
10K-5%-1/16W-0402
R603
510-5%-1/16-0402
R610
1K-5%-1/16W-0402
LED YEL/BLU 12-22/Y2BHC-A30/2C
D603
R602
220-5%-1/16W-0402
R601
(BOM: 549 ohm, 6013A008790C)
D601
R604
R611
D604
R612
R613
D606
G_5VLA
S603
SCREW-P6_0D2_5
S602
SCREW-P6_0D2_5
FIX602 FMASK
FIX601 FMASK
FIX603 FMASK
FIX604 FMASK
FIX605 FMASK
FIX607 FMASK
FIX606 FMASK
FIX608 FMASK
GP Button
SW601
SW603
SW602
SW604
G_SWR
G_SWL
PUSHBUTTON 4P TME-533K-Q-T/R(744)
6026B0076902
PUSHBUTTON 4P TME-533K-Q-T/R(744)_NU
6026B0076902_NU
w/ Fingerprint: OPEN
w/o Fingerprint: Stuff
w/ Fingerprint: Stuff
w/o Fingerprint: OPEN
TO GP
CN603
6012B0112702
6P FPC 88502-0601 ACES
(已反過,5/15)
C602
0.1uF 10V 10% 0402 X7R
TO TP-Lock/B
CN601
6012B0218402
CN 6P FPC 88511-0641 ACES
(已反過,5/25)
INVENTEC
TITLE
BAP41 GP Board
GP
SIZE Custom
CODE A01
DOC.NUMBER
REV A01
CHANGE by
<CHANGE by>
DATE
Thursday, July 02, 2009
SHEET 11 of 19

Fingerprint

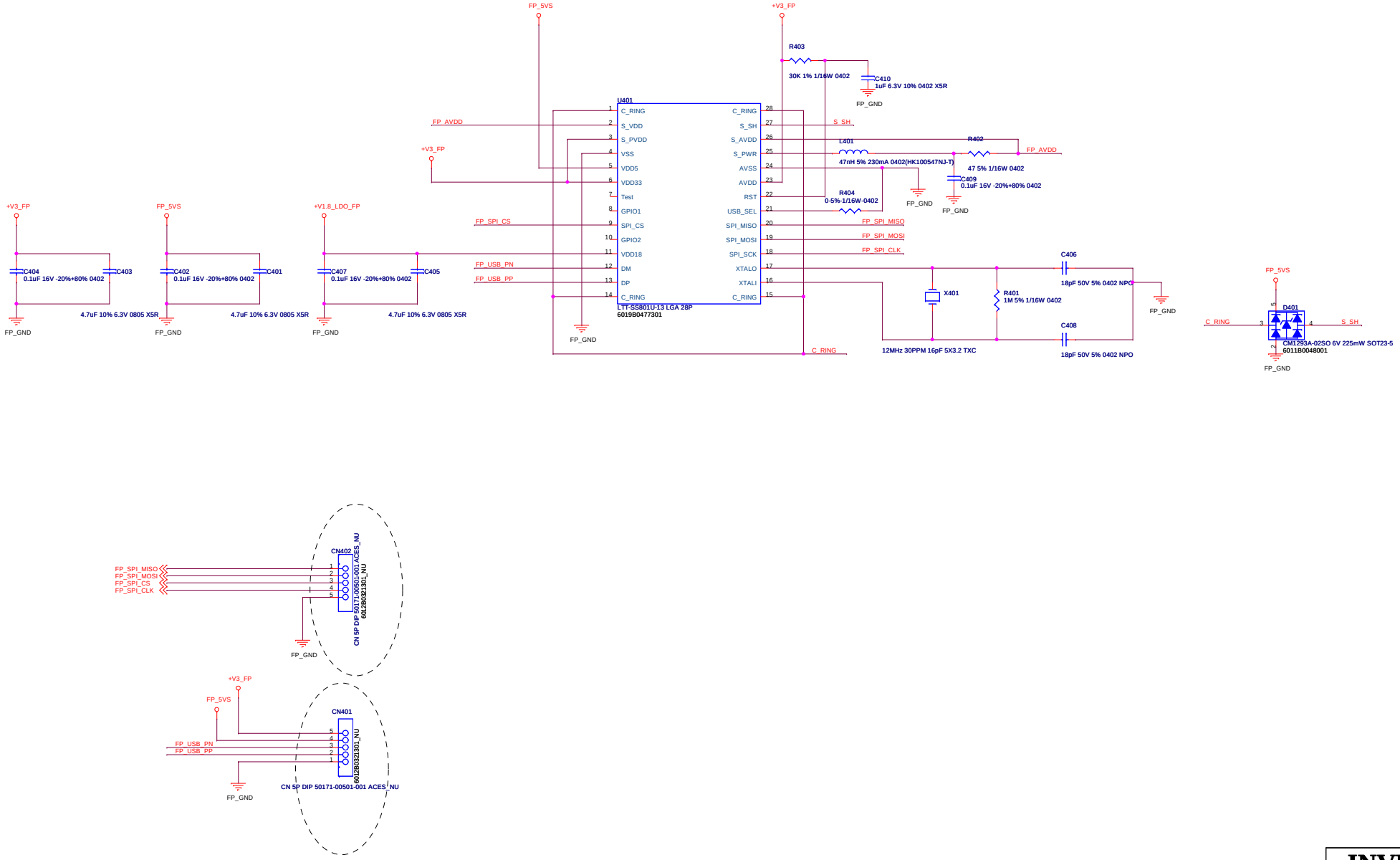

INVENTEC			
TITLE BAP41/BXP41 FP Board Fingerprint			
SIZE Custom	CODE A01	DOC.NUMBER	REV A01
CHANGE by <CHANGE by>	DATE Monday, June 15, 2009	SHEET 12 of 19	

ACER_BAP41

SW BOARD

2009.06.30

	EE	DATE	POWER	DATE
DRAWER				
DESIGN				
CHECK				
RESPONSIBLE				

SIZE= VER:

FILE NAME: XXXX-XXXXXX-XX

P/N XXXXXXXXXXX

INVENTEC

TITLE BAP41 SW BOARD

SIZE	CODE	DOC.NUMBER	REV
Custom	A02	D-CS-1310A2295901-ALG	A02

SHEET 13 of 19

SW BOARD

Synergy(Back up key)

Power consumption key

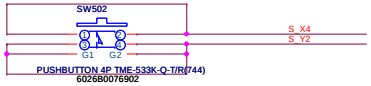

wifi/3G

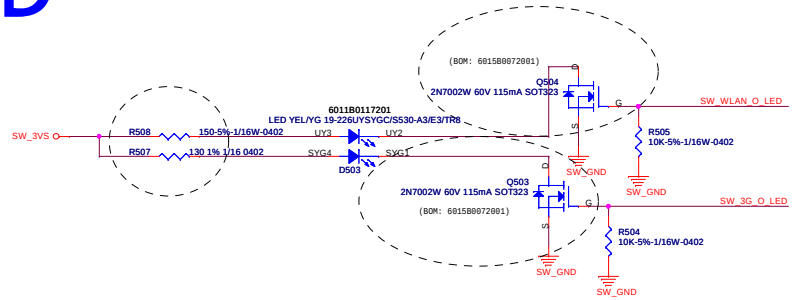

TO MB

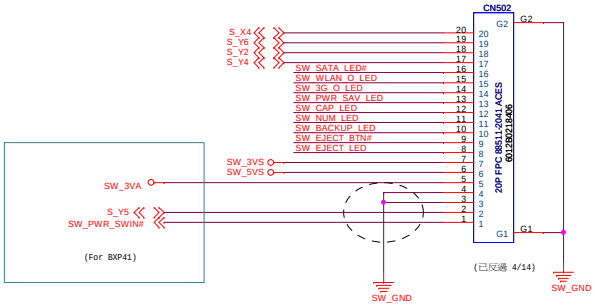

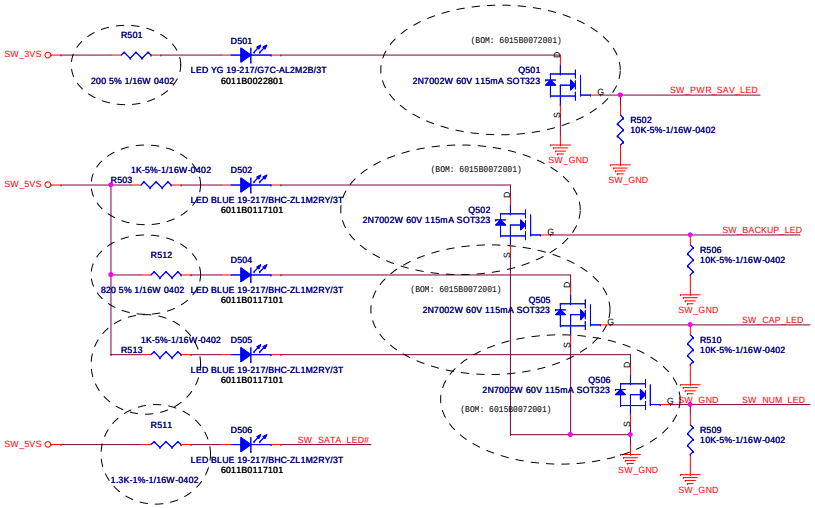

TO EJECTION BUTTON/B

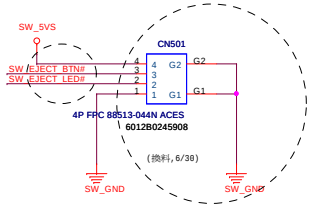

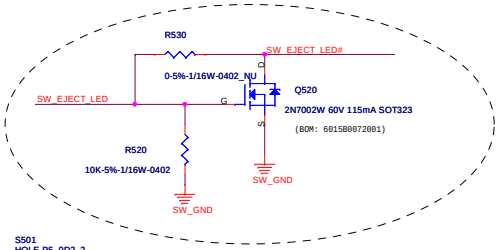

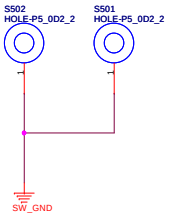

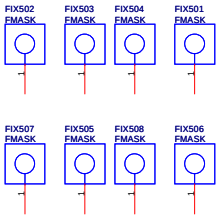

INVENTEC			
TITLE BAP41 SW BOARD SW			
SIZE Custom	CODE A02	DOC.NUMBER	REV A02
		SHEET 14 of 19	

CHANGE by <CHANGE by> DATE Thursday, July 02, 2009

ACER_BAP41/BXP41

USIM BOARD

2009.06.30

	EE	DATE	POWER	DATE
DRAWER				
DESIGN				
CHECK				
RESPONSIBLE				

SIZE= VER:

FILE NAME: XXXX-XXXXXX-XX

P/N XXXXXXXXXXX

INVENTEC

TITLE

BAP41/BXP41 USIM BOARD

SIZE	CODE	DOC.NUMBER	REV
Custom	A01	D-CS-1310A2291001-ALG	A01

SHEET 15 of 19

TO CR/B

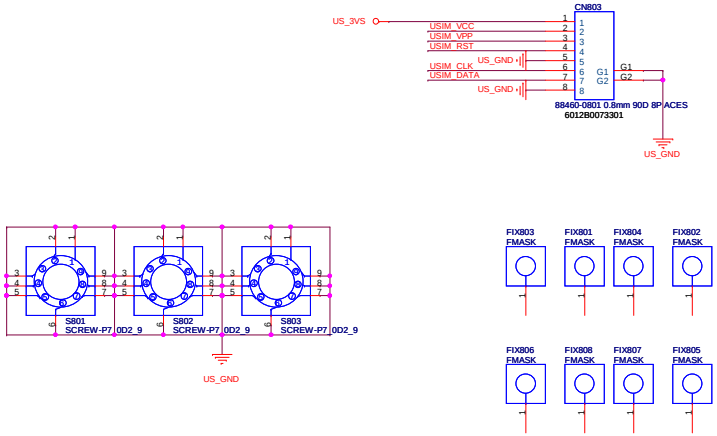

SIM CARD slot

On Chip 5V to 3.3V regulator. No external regulator required
On-Chip power MOSFETs for supplying flash media card power.

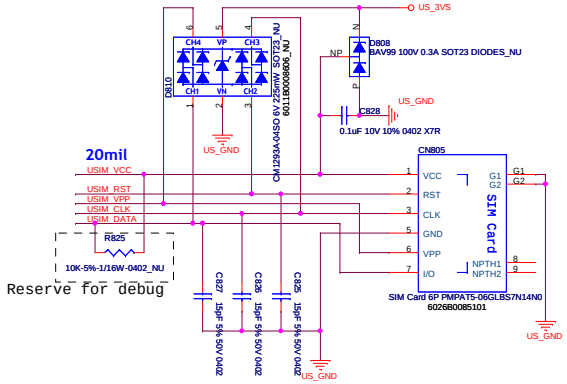

TO MB

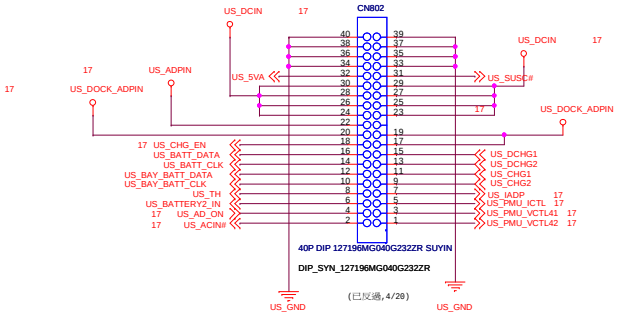

Battery CN

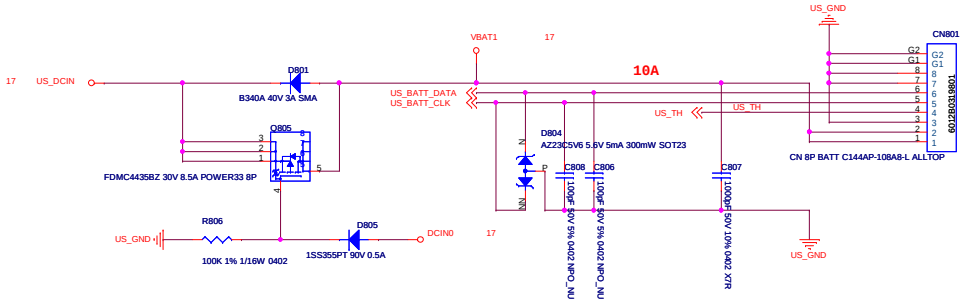

INVENTEC			
TITLE BAP41 USIM BOARD USIM/Battery CN			
SIZE Custom	CODE A01	DOC.NUMBER	REV A01
CHANGE by <CHANGE by>	DATE Thursday, July 02, 2009	SHEET 16 of 19	

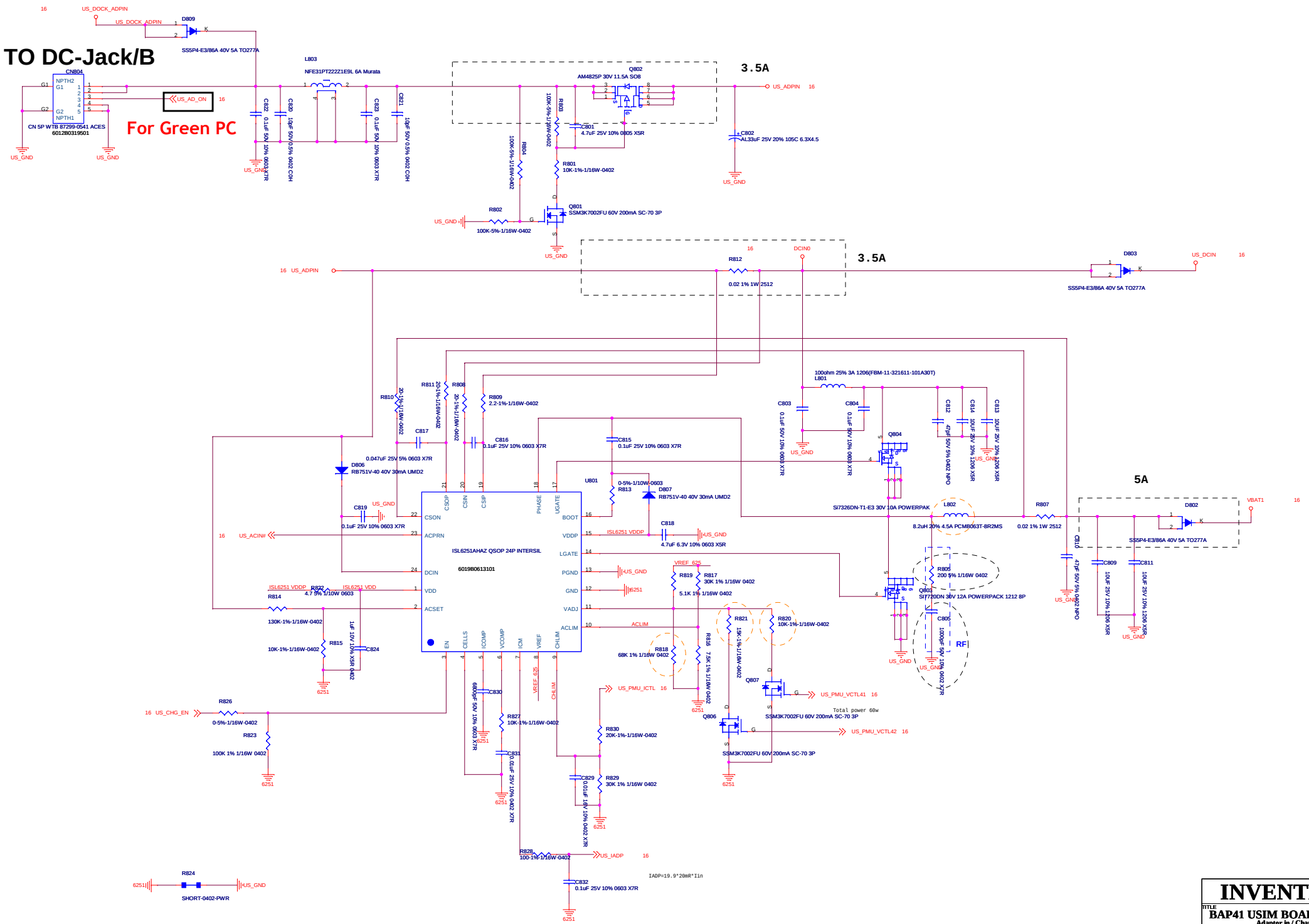
TO DC-Jack/B
For Green PC
CN804
CN 5P WTB 87299-0541 ACES
6012B0319501
US_DOCK_ADPIN
D809
SS5P4-E3/86A 40V 5A TO277A
L803
NFE31PT222Z1E9L 6A Murata
Q802
AM4825P 30V 11.5A SO8
3.5A
US_ADPIN
C802
AL33uF 25V 20% 105C 6.3X4.5
Q801
SSM3K7002FU 60V 200mA SC-70 3P
R802
100K-5%-1/16W-0402
R801
10K-1%-1/16W-0402
C801
4.7uF 25V 10% 0805 X5R
R812
0.02 1% 1W 2512
DCIN0
D803
SS5P4-E3/86A 40V 5A TO277A
US_DCIN
100ohm 25% 3A 1206(FBM-11-321611-101A30T)
L801
Q804
Si7326DN-T1-E3 30V 10A POWERPAK
L802
8.2uH 20% 4.5A PCMB063T-8R2MS
R807
0.02 1% 1W 2512
5A
D802
SS5P4-E3/86A 40V 5A TO277A
VBAT1
Q803
Si7720DN 30V 12A POWERPACK 1212 8P
R809
200 5% 1/16W 0402
RF
U801
ISL6251AHAZ QSOP 24P INTERSIL
6019B0613101
CSON
ACPRN
DCIN
VDD
ACSET
EN
CELLS
ICOMP
VCOMP
ICM
VREF
CHLIM
CSOP
CSIN
CSIP
PHASE
UGATE
BOOT
VDDP
LGATE
PGND
GND
VADJ
ACLIM
R810
20-1%-1/16W-0402
R811
20-1%-1/16W-0402
R808
20-1%-1/16W-0402
R809
2.2-1%-1/16W-0402
C817
0.047uF 25V 5% 0603 X7R
D806
RB751V-40 40V 30mA UMD2
C816
0.1uF 25V 10% 0603 X7R
C815
0.1uF 25V 10% 0603 X7R
R813
0-5%-1/10W-0603
D807
RB751V-40 40V 30mA UMD2
C818
4.7uF 6.3V 10% 0603 X5R
C819
0.1uF 25V 10% 0603 X7R
US_ACIN#
R814
130K-1%-1/16W-0402
R815
10K-1%-1/16W-0402
C824
1uF 10V 10% X5R 0402
R822
4.7 5% 1/10W 0603
R826
0-5%-1/16W-0402
US_CHG_EN
R823
100K 1% 1/16W 0402
R824
SHORT-0402-PWR
R819
30K 1% 1/16W 0402
R817
5.1K 1% 1/16W 0402
R818
68K 1% 1/16W 0402
R816
7.5K 1% 1/16W 0402
R821
15K-1%-1/16W-0402
R820
10K-1%-1/16W-0402
Q807
SSM3K7002FU 60V 200mA SC-70 3P
Q806
SSM3K7002FU 60V 200mA SC-70 3P
US_PMU_VCTL41
US_PMU_VCTL42
Total power 60w
US_PMU_ICTL
R827
10K-1%-1/16W-0402
R830
20K-1%-1/16W-0402
R829
30K 1% 1/16W 0402
R828
100-1%-1/16W-0402
US_IADP
IADP=19.9*20mR*Iin
C832
0.1uF 25V 10% 0603 X7R
C830
680pF 50V 10% 0603 X7R
C831
0.01uF 25V 10% 0402 X7R
C829
0.01uF 16V 10% 0402 X7R
US_GND
INVENTEC
TITLE
BAP41 USIM BOARD
Adaptor in / Charge
SIZE Custom
CODE A01
DOC.NUMBER D-CS-1310A2291001-ALG
REV A01
CHANGE by Miles Liu
DATE Thursday, July 02, 2009
SHEET 17 of 19

ACER_BAP41/BXP41

TRANSFER BOARD

2009.06.30

	EE	DATE	POWER	DATE
DRAWER				
DESIGN				
CHECK				
RESPONSIBLE				

SIZE= VER:

FILE NAME: XXXX-XXXXXX-XX

P/N XXXXXXXXXXX

INVENTEC

TITLE BAP41/BXP41 Transfer/B

SIZE	CODE	DOC.NUMBER	REV
Custom	A01	D-CS-1310A2291501-ALG	A01

SHEET 18 of 19

TO MB

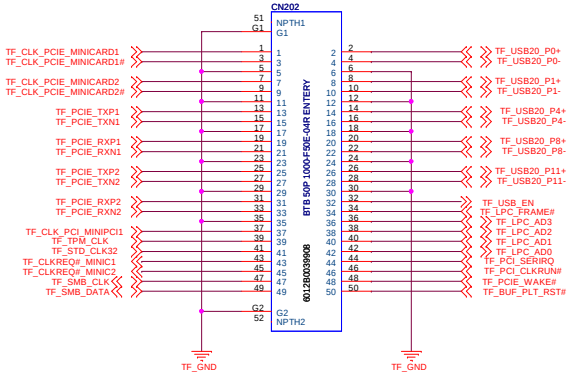

TO MB

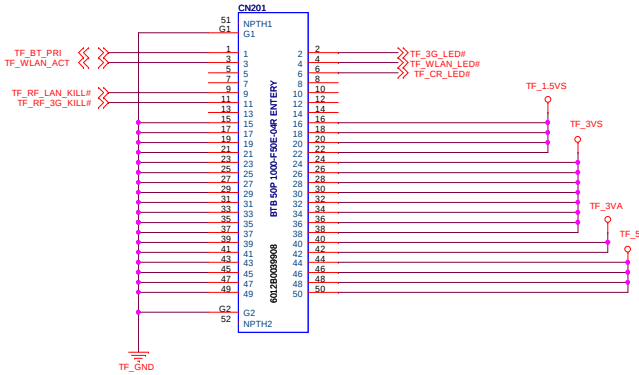

TO CRB

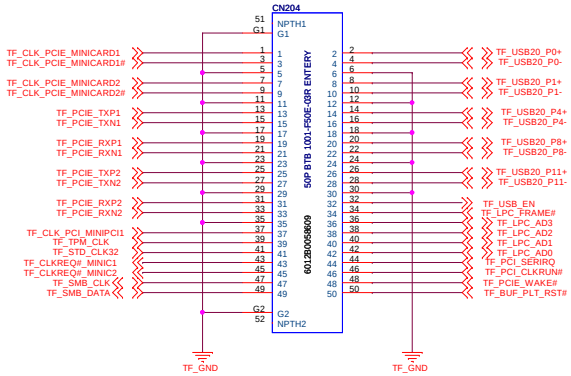

TO CRB

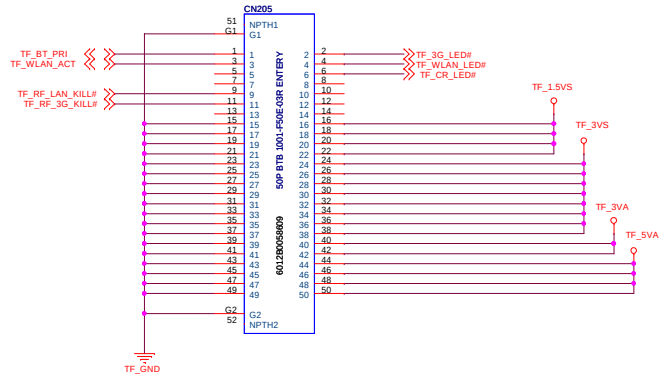

TPM CN

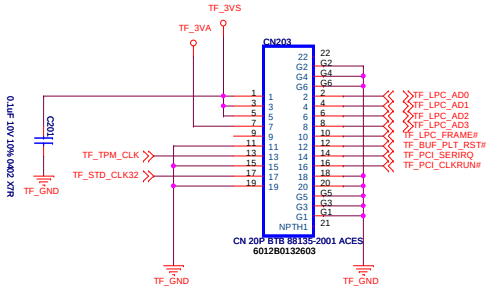

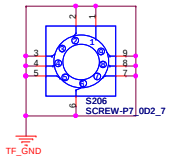

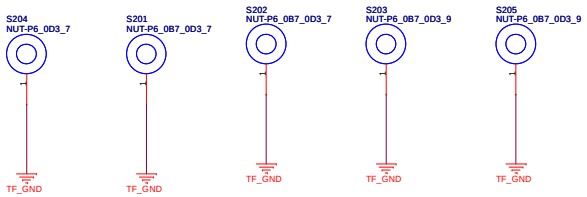

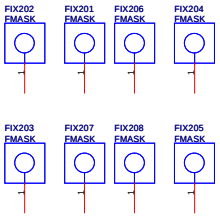

INVENTEC			
TITLE BAP41 Transfer/B TPM CN			
SIZE Custom	CODE A01	DOC.NUMBER	REV A01
CHANGE by <CHANGE by>	DATE Tuesday, June 02, 2009	SHEET 19 of 19	